ALL SHORE INDUSTRIES

ASI-T-2701400A0SPN/W

No	Item	Specification	Remark
1	Type	Transflective	--
2	Display Mode	Monochrome	--
3	Screen Size	2.7inch	--
4	Resolution	400 x240	--
5	Active Area	58.8 (W) x 35.28(H) (mm)	--
6	Dot Size	0.147(W) x 0.147(H) (mm)	--
7	Back Light Color	YELLOW-GREEN(λ= 575±10 nm)	--
8	Weight	(TBD)	g
9	Module Dimension	64.3(W) x 45.65(H) x 4.6(D) mm	--

RECORD OF REVISION

DATE	REV.	PAGE	SUMMARY

3. General specifications

3.1 General specifications

It is a Reflective active matrix with slightly transmissive type memory liquid crystal display (LCD) that uses the CG silicon thin film transistor as a switching devices.
This model is composed of a Transflective type TFT-LCD Panel, a driver circuit and a back-light unit.

4. Mechanical data

No	Item	Specification	Remark
1	Type	Transflective	--
2	Display Mode	Monochrome	--
3	Screen Size	2.7inch	--
4	Resolution	400 x240	--
5	Active Area	58.8 (W) x 35.28(H) (mm)	--
6	Dot Size	0.147(W) x 0.147(H) (mm)	--
7	Back Light Color	YELLOW-GREEN(λ= 575±10 nm)	--
8	Weight	(TBD)	g
9	Module Dimension	64.3(W) x 45.65(H) x 4.6(D) mm	--

5. Absolute maximum ratings

5.1 Electrical absolute maximum ratings

(1) TFT-LCD Panel Absolute Maximum Ratings

Ta=25°C

Item	Symbol	Condition	Standard Value		Unit	Remark
			Min.	Max.		
Analog power supply	VDDA	VSSA=0V	-0.3	5.8	V	--
Digital power supply	VDD	VSS=0V	-0.3	5.8	V	--
Input signal terminal Voltage (high)	VIH	--	--	VDD	V	--
Input signal terminal Voltage (low)	VIL	--	-0.3	--	V	--

* If the LSI is used above these absolute maximum ratings, it may become permanently damaged. Using the LSI within the following electrical characteristics limit is strongly recommended for normal operation. If these electrical characteristic conditions are also exceeded, the LSI will malfunction and cause poor reliability.

5.2 Environmental absolute maximum ratings

Item	Symbol	Min.	Max.	Unit	Remark
Operation temperature range	Top	-20	70	°C	Ambient
Storage temperature range	Tst	-30	80	°C	Ambient

NOTE (1)：Corrosive gas environment is not acceptable.

NOTE (2)：TFT-LCD color will change slightly depending on environment temperature. This phenomenon is reversible.

NOTE (3)：To see section 12.1 and 12.2 on page 21.

6. Electrical characteristics

(1)TFT-LCD Module

Ta=25°C , VDD=5V

Item	Symbol	Min.	Typ.	Max.	Unit	Remark
Analog power supply	VDDA	4.8	5.0	5.5	V	--
Digital power supply	VDD	4.8	5.0	5.5	V	NOTE(1)
Hight level input voltage	VIH	2.7	3.0	VDD NOTE(3)	V	NOTE(2)
Low level input voltage	VIL	VSS	VSS	VSS+0.15	V	
Power Consumption (Average) Measurement Condition (1)	PDD	--	50	250	uW	NOTE(4) NOTE(6)
Power Consumption (Average) Measurement Condition (2)	PDD	--	175	350	uW	NOTE(5) NOTE(6)

NOTE(1)：Also applicable to EXTMODE=”H”.

NOTE(2)：Applies to SCLK, SI, SCS , DISP, EXTCOMIN.

NOTE(3)：Can operate below VDD voltage, however, operation around 3V is recommended.

NOTE(4)：Display mode (no display data update), Display pattern: Vertical stripe display.

NOTE(5)：Data update mode (with display data update:1Hz) Common inversion with VDD=5V、VDDA=5V、fSCLK=1MHz、fSCS=1Hz, Display pattern: Vertical stripe display.

NOTE(6)：This is value in steady condition, not the value of peak power at the time of COM operation. Some marging for power supply is recommended. We recommend capacitor for VDD and VDDA. (If VDD and VDDA are on separate systems, we recommend capacitor for each.)

(2) Back-Light Unit

Ta=25°C

Item	Symbol	Min.	Typ.	Max.	Unit	Remark
Power supply voltage	V_{LED}	19.4	20	20.6	V	--
Power supply current	I_{LED}	--	20	--	mA	--

NOTE (1)：Current reduction rate of LED backlight is according to the graph indicated below:

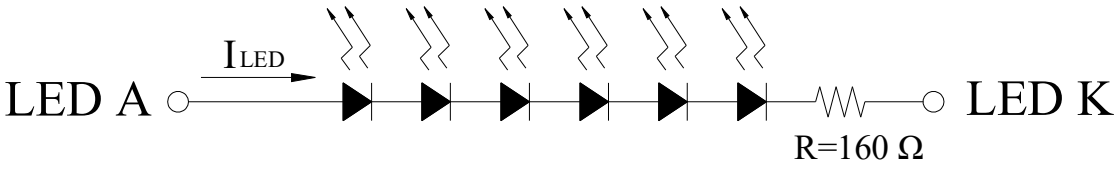

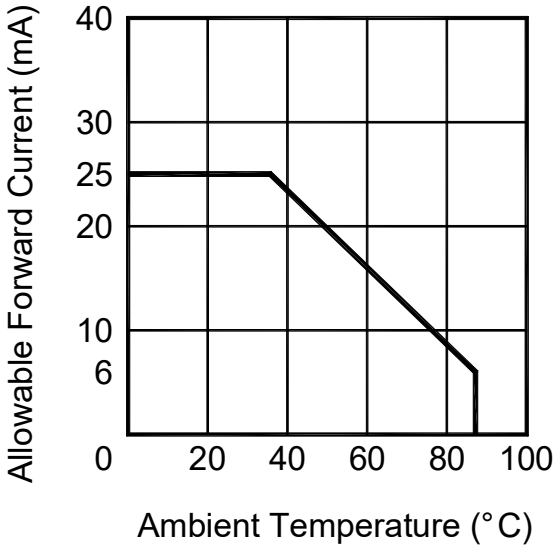

7. Optical characteristics

Ta=25°C, I_{LED}=20mA

Item		Symbol	Condition	Min.	Typ.	Max.	Unit	Note
Brightness		B	θ=0° Normal viewing angle At the center of panel	--	(0.8)	--	cd/m^2	(1)
Contrast Ratio		C/R		--	(5)	--	--	(2)
Response Time		Tr		--	10	20	ms	(3)
		Tf		--	20	40	ms	(3)
Viewing Angle	Top	θ_U	C/R≧2 Backlight On	40	60	--	deg.	(4)
	Bottom	θ_D		40	60	--		
	Left	θ_L		40	55	--		
	Right	θ_R		40	55	--		
Uniformity		Un	θ=0° Normal viewing angle	80	85	--	%	(5)

Note 1: The brightness test equipment setup

I_{LED}=20mA, Field=1°

(As measuring "black" image, field=1°

Is the best testing condition.)

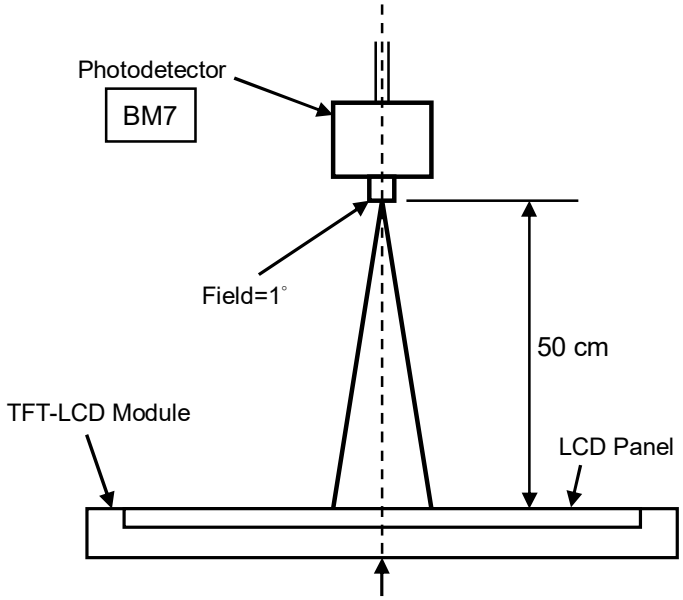

Note 2: Definition of contrast Ratio (C/R)

$$C/R = \frac{\textbf{Brightness When LCD is at "White" State}}{\textbf{Brightness When LCD is at "Black" State}}$$

Note 3: Definition of response time

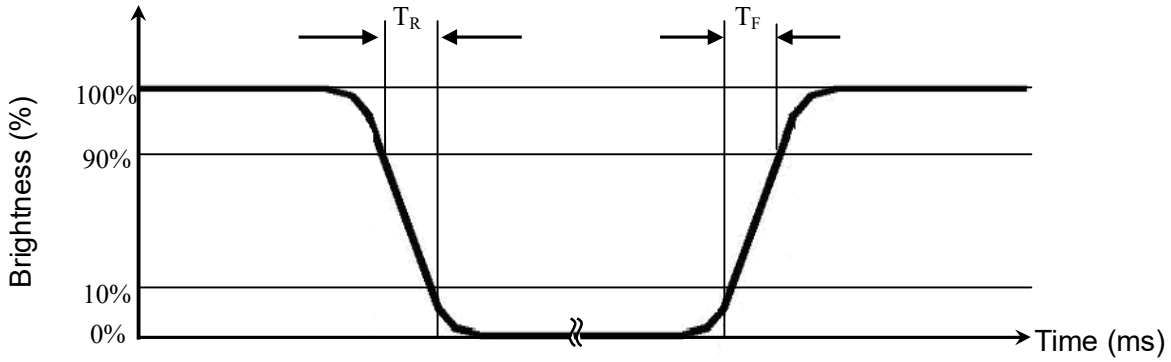

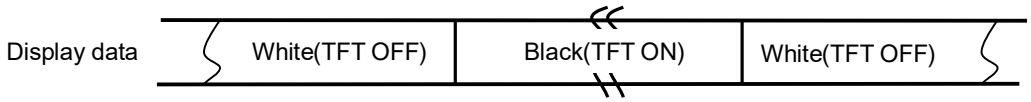

Note 4: Definition of viewing angle

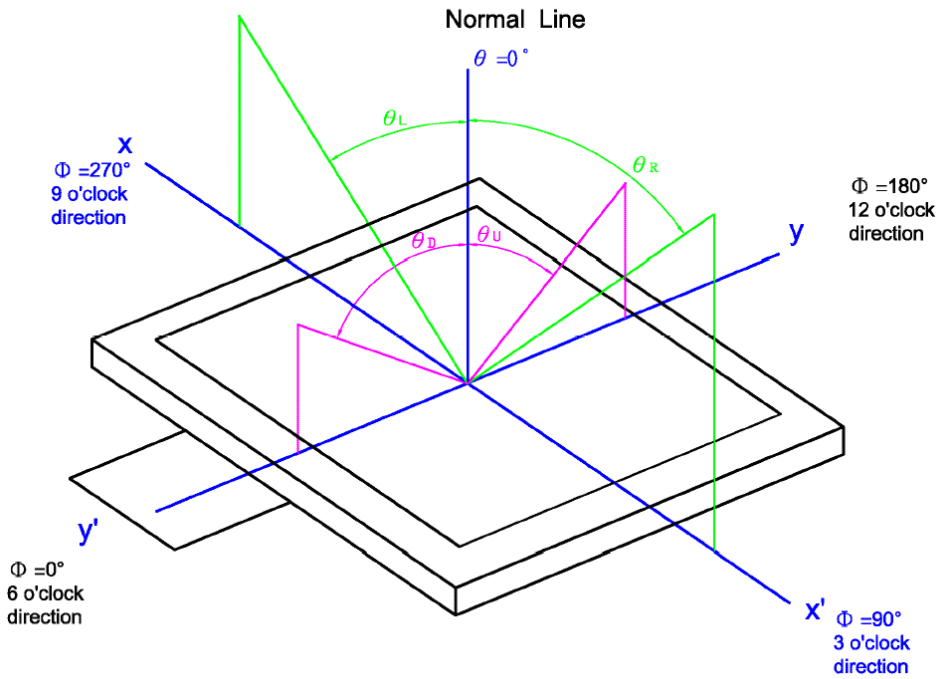

Note 5: Definition of uniformity (Un)

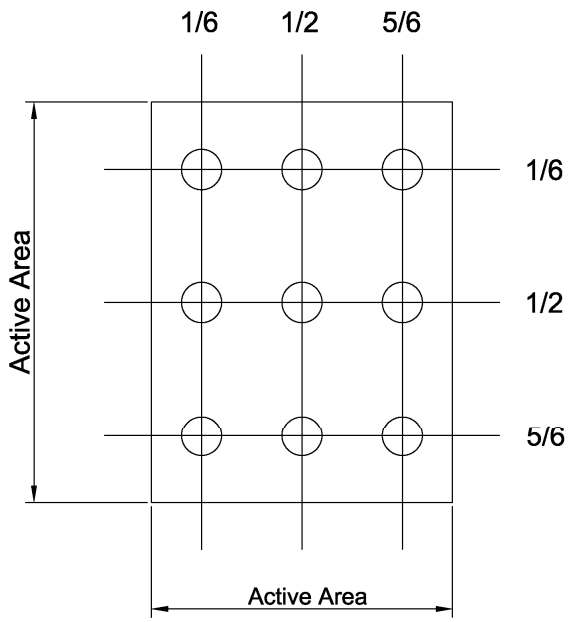

$$Un = \frac{\mathbf{Bmin}}{\mathbf{Bmax}} x100\%$$

8. Outline dimension

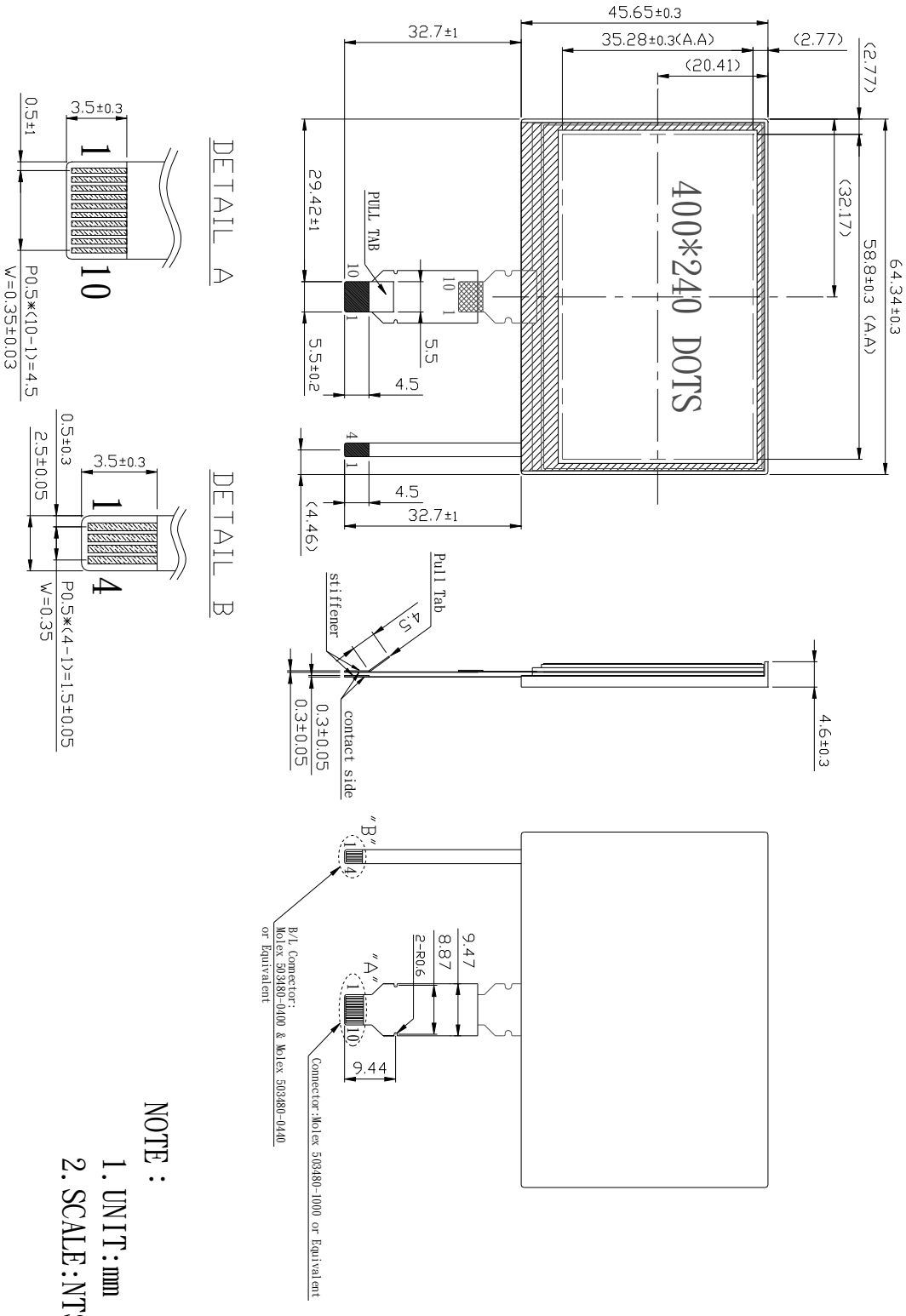

9. Input Terminal Pin Assignment

9.1 Input Signal & Power(Connector: FPC0.5C-WTX-30P or equivalent)

Pin no	Symbol	Description	Remark
1	SCLK	Serial clock signal	I
2	SI	Serial input signal	I
3	SCS	Chip select signal	I
4	EXTCOMIN	External COM inversion signal input (“H” : active)	I
5	DISP	Display ON/OFF signal	I NOTE(2)
6	VDDA	Analog power supply	P
7	VDD	Digital power supply	P
8	EXTMODE	COM inversion mode switch terminal	I NOTE(1)
9	VSS	Digital ground	P
10	VSSA	Analog ground	P

NOTE(1)：”H”=EXTCOMIN signal enabled. “L”=Serial input flag enabled.
When “H”, connect EXTMODE to VDD.
When “L”, connect EXTMODE to VSS.

NOTE(2)：ON/OFF for LCD display only. Memory data is maintained.
When “H”, displays with memory data.
When “L”, displays all white with memory data maintained.

NOTE(3)：Recommended Circuit

COM signal serial input
EXTMODE=”L”

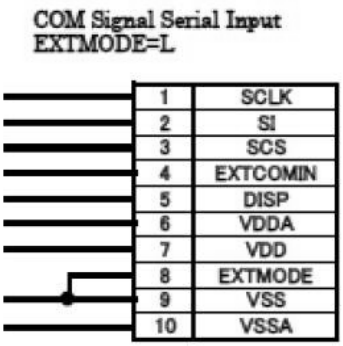

External COM signal input
EXTMODE=”H”

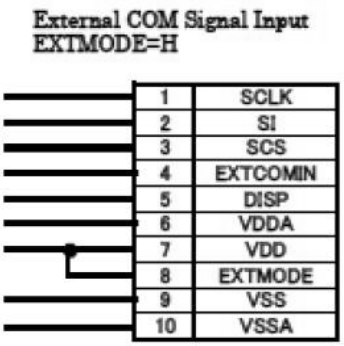

9.2 BACKLIGHT Input Signal & Power (Connector: FPC0.5C-WTX-04P or equivalent)

Pin no	Symbol	Description	Remark
1	LED(-)	POWER SUPPLY FOR LED CATHODE(-)	--
2	LED(-)	POWER SUPPLY FOR LED CATHODE(-)	--
3	LED(+)	POWER SUPPLY FOR LED ANODE(+)	--
4	LED(+)	POWER SUPPLY FOR LED ANODE(+)	--

10. External Circuit Example

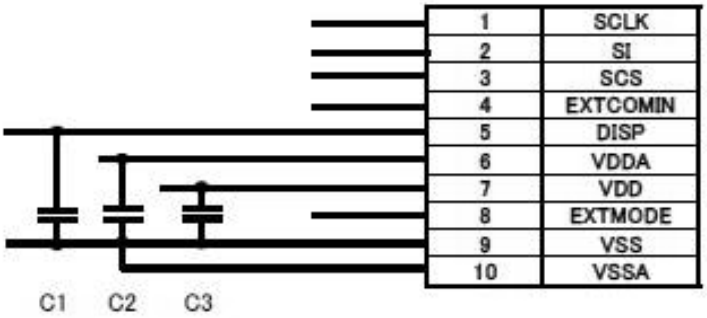

Recommended External Circuit

＜Recommended Capacitor＞

C1: Between DISP-VSS, B characteristics 0.1uF ceramic capacitor

C2: Between VDDA-VSS, B characteristics 0.1uF or more cerac capacitor

C3: Between VDD-VSS, B characteristics 1uF or more ceramic capacitor

※Above circuit and parts are only recommendation.

For actual use, please evaluate their conformity with your system and design.

(Capacitor pressure resistance can be larger than resistance indicated above.)

11. Timing characteristics

11.1 Power Supply Sequence

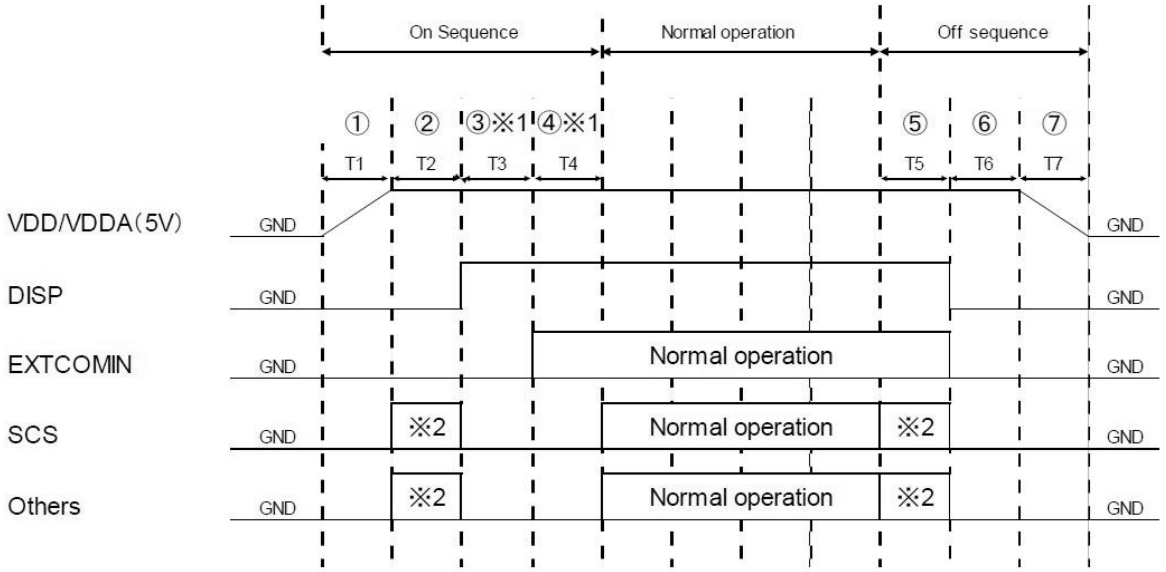

※Refer to timing chart and AC timing characteristics for detail

※1 ③ and ④ may be opposite (however, TCOM polarity inversion will not occur even with EXTCOMIN between DISP="L". Also, when DISP and EXTCOMIN are simultaneously started up, allow 30us or more before SCS starts up (It may be less than 60us).

※2 Setting value for pixel memory initialization

SCS=Driving accordingly to clear pixel internal memory method (use all clear flag or write all screen white) S1=M2 (all clear flag) = "H" or write white

SCLK: Normal Driving

[ON Sequence]

(1) 5V rise time (depends on IC)

(2) Pixel memory initialization

T2: 1V or more Initialize with M2 (all clear flag) or write all screen white

(3) Release time for initialization of TCOM latch T3: 30us or more

Time required to release COM related latch circuit initialization which is initializing using DISP signals

(4) TCOM polarity initialization time T4: 30us or more

Time required initializing TCOM polarity accordingly to EXTCOMIN input

[Normal Operation]

Duration of normal driving

[Off Sequence]

(5) Pixel memory initialization time T5: 1V or more

(6) VA, VB, VCOM initialization time T6: 1V or more

(7) 5V falling time (Depends on IC)

【Remark】Cautions when powering on

Remark 1) VDD and VDDA should rise simultaneously or VDD should rise first.

Remark 2) VDD and VDDA should simultaneously or VDD should fall first

11.2 Input Signal Basic Characteristics

SCS, SI, SCLK signal

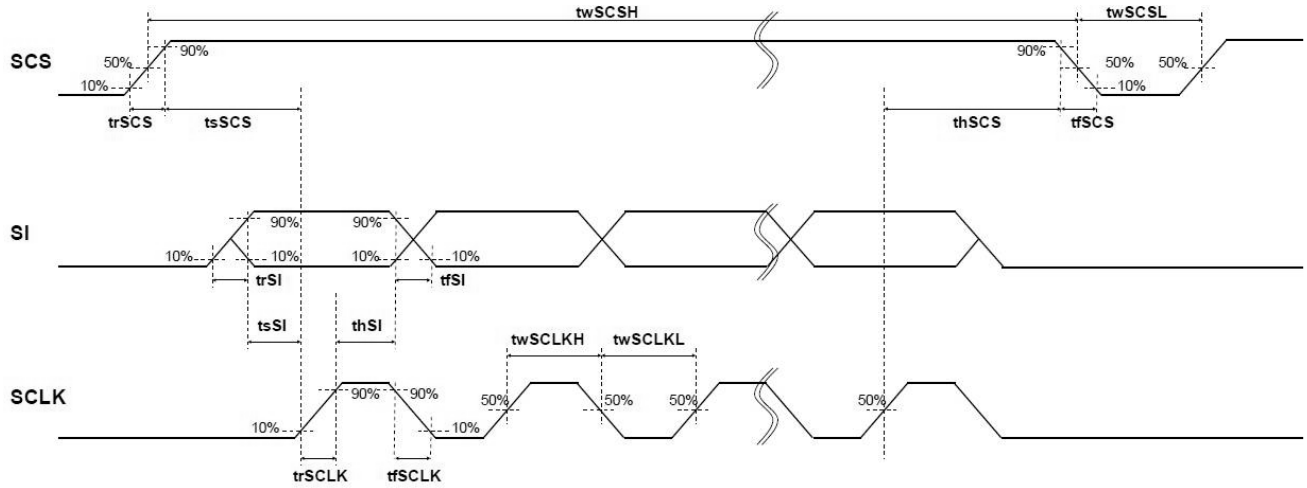

EXTCOMIN signal

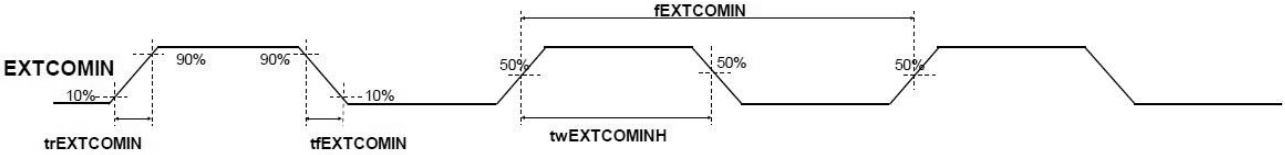

DISP signal

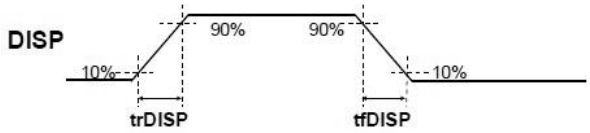

※SCS, SI, SCLK, DISP, EXTCOMIN：3V input voltage

VDDA=＋5.0V、VDD=＋5.0V、GND=0V、Ta=25℃

Item	Code	MIN	TYP	MAX	Unit	Remark
Frame Frequency	fSCS	1	-	20	Hz	
Clock Frequency	fSCLK		1	2	MHz	
Vertical rush duration	tV	49.993	-	1000	ms	
COM Frequency	fCOM	0.5	-	10	Hz	

VDDA=＋5.0V、VDD=＋5.0V、GND=0V、Ta=25℃

Item	Code	MIN	TYP	MAX	Unit	Remark
SCS rising time	trSCS			50	ns	
SCS falling time	tfSCS			50	ns	
SCS High width	twSCSH	220			us	Data update mode
		12			us	Display mode
SCS Low width	twSCSL	1			us	
SCS setup time	tsSCS	3			us	
SCS hodl time	thSCS	1			us	
SI rising time	trSI			50	ns	
SI falling time	tfSI			50	ns	
SI set upt time	tsSI	120			ns	
SI hold time	thSI	190			ns	
SCLK rising time	trSCLK			50	ns	
SCLK falling time	tfSCLK			50	ns	
SCLK High width	twSCLKH	200	450		ns	
SCLK Low width	twSCLKL	200	450		ns	
EXTCOMIN signal frequency	fEXTCOMIN		1	20	Hz	NOTE(1)
EXTCOMIN signal rising time	trEXTCOMIN			50	ns	
EXTCOMIN signal falling time	tfEXTCOMIN			50	ns	
EXTCOMIN signal High width	twEXTCOMIN	1			us	
DISPrising time	trDISP			50	ns	
DISP falling time	tfDISP			50	ns	

NOTE(1)：EXTCOMIN frequency should be made lower than frame frequency

11.3 Input Signal Timing Chart

11.3.1 Data Update Mode (1 line)

Updates data of only one specified line (M0=”H”, M2=”L”)

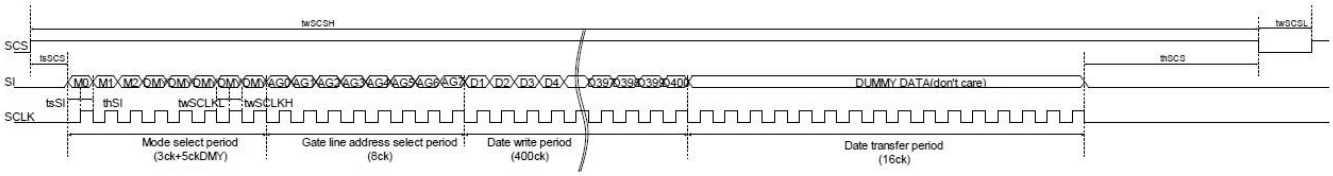

M0: Mode flag. Set for “H”. Data update mode (Memory internal data update)
When “L”, display mode (maintain memory internal data).

M1: Frame inversion flag.
When “H”, outputs VCOM=”H”, and when “L”, outputs VCOM=”L”.
When EXTMODE=”H”, it can be “H” or “L”.

M2: All clear flag.
Refer to 11.3.4) All Clear Mode to execute clear.

DUMMY DATA: Dummy data. It can be “H” or “L” (“L” is recommended.)

※Data write period
Data is being stored in 1st latch block of binary driver on panel.

※Data transfer period
Data written in 1st latch is being transferred (written) to pixel internal memory circuit.

※ For gate line address setting, refer to 11.4) Input Signal and Display.
※ M1: Frame inversion fl is enabled when EXTMODE=”L”.
※ When SCS becomes “L”, M0 and M2 are cleared.

11.3.2 Data Update Mode (Multiple lines)

Updates arbitrary multiple lines data. (M0=”H”, M2=”L”)

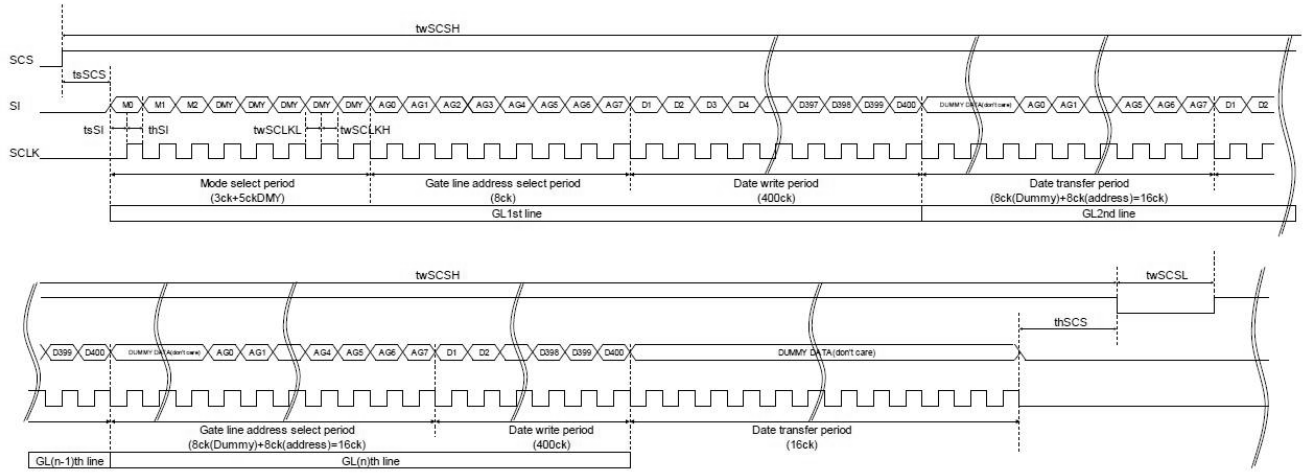

M0: Mode flag. Set for “H”. Data update mode (Memory internal data update)
When “L”, display mode (maintain memory internal data).

M1: Frame inversion flag.
When “H”, outputs VCOM=”H”, and when “L”, outputs VCOM=”L”.
When EXTMODE=”H”, it can be “H” or “L”.

M2: All clear flag.
Refer to 11.3.4) All Clear Mode to execute clear.

DUMMY DATA: Dummy data. It can be “H” or “L” (“L” is recommended.)

※ Data write period
Data is being stored in 1st latch block of binary driver on panel.

※ Data transfer period
For example, during GL2nd line data transfer period, GL 2nd line address is latched and GL1st line data is transferred from 1st latch to pixel internal memory circuit at the same time.

※ For gate line address setting, refer to 11.4) Input Signal and Display.
※ Input data continuously.
※ M1: Frame inversion flag is enabled when EXTMODE=”L”.
※ When SCS becomes “L”, M0 and M2 are cleared.

11.3.3 Display Mode

Maintains memory internal data (maintains current display). (M0=”L”, M2=”L”)

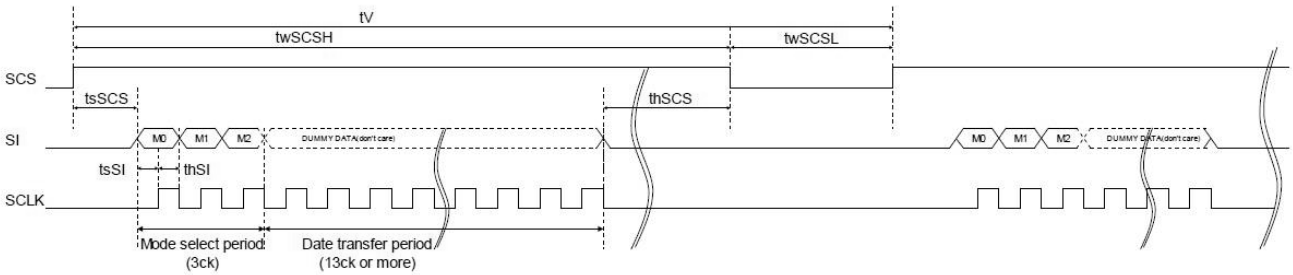

M0: Mode flag. Set for “H”. Data update mode (Memory internal data update)
When “L”, display mode (maintain memory internal data).
M1: Frame inversion flag.
When “H”, outputs VCOM=”H”, and when “L”, outputs VCOM=”L”.
When EXTMODE=”H”, it can be “H” or “L”.
M2: All clear flag.
Refer to 11.3.4) All Clear Mode to execute clear.
DUMMY DATA: Dummy data. It can be “H” or “L” (“L” is recommended.)

※ M1: Frame inversion flag is enabled when EXTMODE=”L”
※ When SCS becomes “L”, M0 and M2 are cleared.

11.3.4 All Clear Mode

Clears memory internal data and writes white. (M0=”L”, M2=”H”)

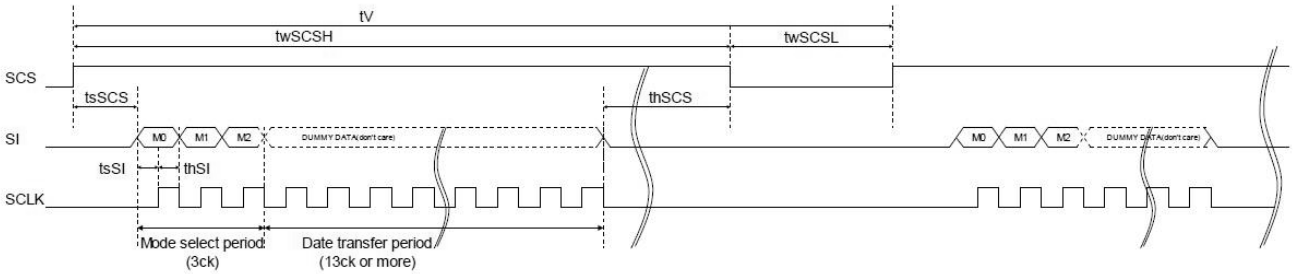

M0: Mode flag.
Set it “L”.
M1: Frame inversion flag.
When “H”, outputs VCOM=”H”, and when “L”, outputs VCOM=”L”.
When EXTMODE=”H”, it can be “H” or “L”.
M2: All clear flag.
Set it “H”
DUMMY DATA: Dummy data. It can be “H” or “L” (“L” is recommended.)

※ M1: Frame inversion flag is enabled when EXTMODE=”L”.
※ When SCS becomes “L”, M0 and M2 are cleared.

11.3.5 COM Inversion

There are two types of inputs, COM signal serial input (EXTMODE=”L”) and External COM signal input (EXTMODE=”H”).

EXTMODE=”L”

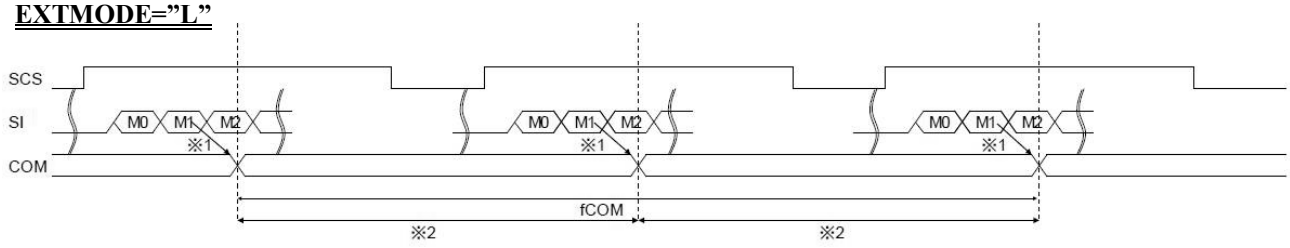

M1 : LC polarity inversion flag: If M1 is "H" then VCOM="H" is output. If M1 is "L" then VCOM="L" is output.

※ 1 : LC inversion has been changed by M1 flag statement.

※ 2 : The periods of plus polarity and minus polarity should be same length as much as possible.

EXTMODE=”H”

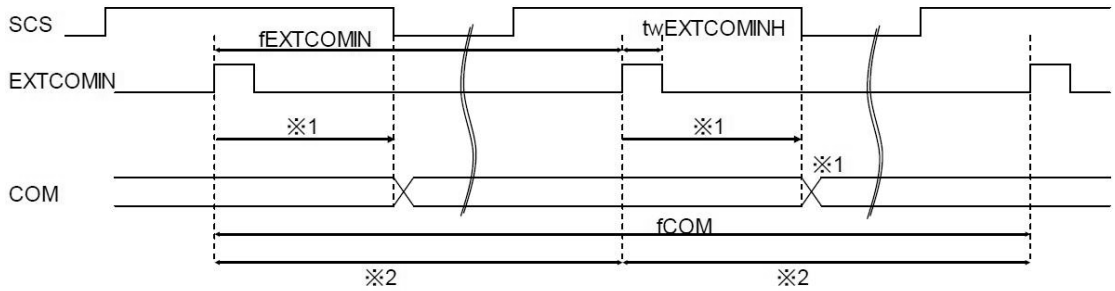

※ 1 : LC inversion polarity has been set by the rising timing of EXTCOMIN in internal circuit block

※ 2 : The period of EXTCOMIN should be constant.

※EXTCOMIN input when the SCS signals is low.

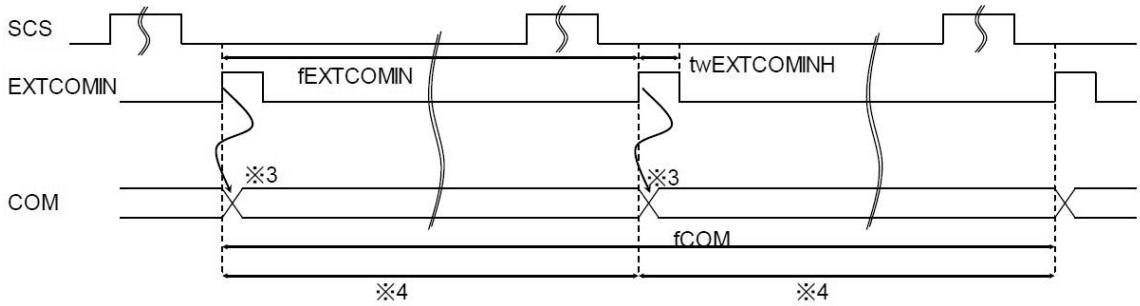

※ 3 : LC inversion polarity has been set by the rising edge of EXTCOMIN.

※ 4 : The period of EXTCOMIN should be constant.

11.4 Input Signal and Screen Display, Gate Address (Line) Setup

Data screen display position [H,V]

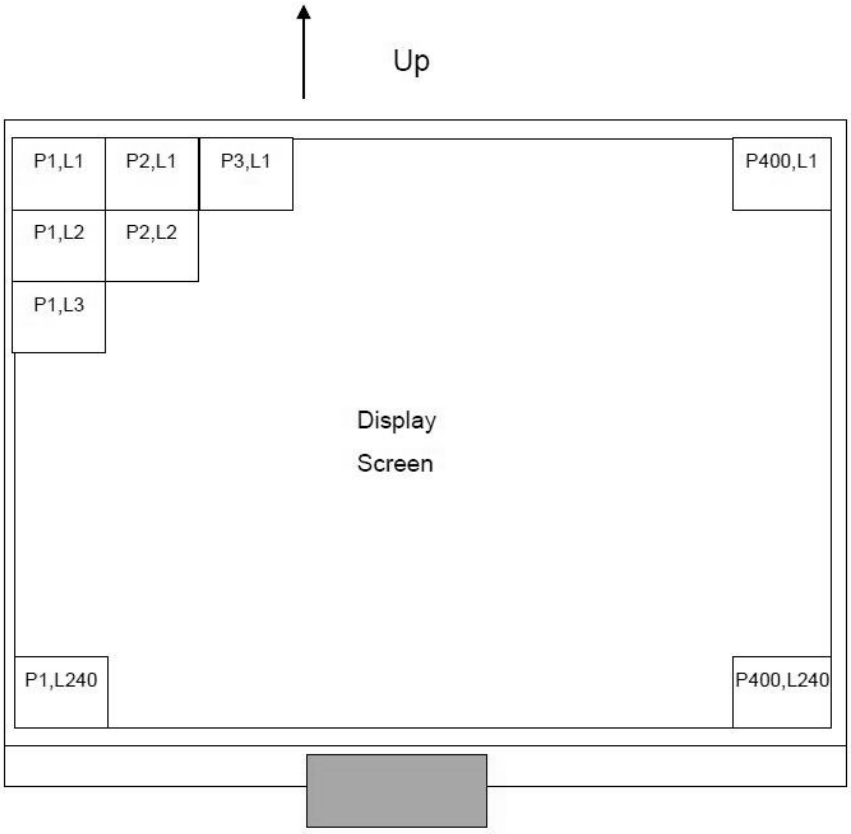

Line	Gate Line Address Setup							
	AG0	AG1	AG2	AG3	AG4	AG5	AG6	AG7
L1	H	L	L	L	L	L	L	L
L2	L	H	L	L	L	L	L	L
L3	H	H	L	L	L	L	L	L
.	.	.	.	.	.	.	.	.
.	.	.	.	.	.	.	.	.
.	.	.	.	.	.	.	.	.
L238	L	H	H	H	L	H	H	H
L239	H	H	H	H	L	H	H	H
L240	L	L	L	L	H	H	H	H

12. Reliability Test Items

12.1 Reliability Test Items

No.	Test items	Conditions	Remark
1	High temperature operation	70°C , 96hours	--
2	Low temperature operation	-20°C , 96hours	--
3	High temperature storage	80°C , 96hours	--
4	Low temperature storage	-30°C , 96hours	--
5	High temperature & high humidity operation	60°C , 90% RH , 96hours	--
6	Thermal Shock storage	-30°C , 30min. ~ 80°C, 30min. , 5 Cycles	--
7	Vibration test	10~150 Hz, 100m/s2, 120min	Non-operation
Criterion: There should be no change which might affect the practical display function when the display quality test is conducted under normal operating condition.			

12.2 Abnormal Test condition(Not meets LCD specifications):

No.	Test items	Conditions	Remark
1	High temperature operation	80°C, 96hours	--
2	Low temperature operation	-40°C, 96hours	--
3	High temperature storage	80°C, 96hours	--
4	Low temperature storage	-40°C, 96hours	--
5	High temperature & high humidity operation	60°C, 90% RH , 96hours	--
6	Thermal Shock storage	-30°C, 30min. ~ 80°C, 30min. , 5 Cycles	--
7	Vibration test	10~150 Hz, 100m/s2, 120min	Non-operation
NOTE(1)： We have LCD module for 10pcs tested at 40 degrees below zero for 96 hours in the high-low temperature test chamber, and display switch turns slow accordingly. NOTE(2)： After the abnormal reliability test, doesn't guarantee to fulfill all of the operation and cosmetic specifications.			

13. General Precautions

Please pay attentions to the followings as using the LCD module.

13.1 Handling

(a) Do not apply strong mechanical stress like drop, shock or any force to LCD module. It may cause improper operation, even damage.

(b) Because the polarizer is very fragile and easy to be damaged, do not hit, press or rub the display surface with hard materials.

(c) Do not put heavy or hard material on the display surface, and do not stack LCD modules.

(d) If the display surface is dirty, please wipe the surface softly with cotton swab or clean cloth.

(e) Avoid using Ketone type materials (e.g. Acetone), Toluene, Ethyl acid or Methyl chloride to clean the display surface. It might damage the polarizer permanently. The recommended solvents are water and Isopropyl alcohol.

(f) Wipe off water droplets or oil immediately.

(g) Protect the LCD module from ESD. It will damage the LSI and the electronic circuit.

(h) Do not touch the output pins directly with bare hands.

(I) Do not disassemble the LCD module.

13.2 Storage

(a) Do not leave the LCD modules in high temperature, especially in high humidity for a long time.

(b) Do not expose the LCD modules to sunlight directly.

(c) The liquid crystal is deteriorated by ultraviolet. Do not leave it in strong ultraviolet ray for a long time.

(d) Avoid condensation of water. It may cause improper operation.

(e) Please stack only up to the number stated on carton box for storage and transportation. Excessive weight will cause deformation and damage of carton box.

13.3 Operation

(a) When mounting or dismounting the LCD modules, turn the power off.

(b) Protect the LCD modules from electric shock.

(c) The Driver IC control algorithms should always obeyed to avoid damaging the LSI and electronic circuit.

(d) Be careful to avoid mixing up the polarity of power supply for backlight.

(e) Absolute maximum rating specified above has to be always kept in any case. Exceeding it may cause non-recoverable damage of electronic components or, nevertheless, burning.

(f) When a static image is displayed for a long time, remnant image is likely to occur.

(g) Be sure to avoid bending the FPC to an acute shape, it might break FPC.

13.4 Others

(a) If the liquid crystal leaks from the panel, it should be kept away from the eyes or mouth.

(b) For the fragility of polarizer, it is recommended to attach a transparent protective plate over the display surface.

(c) It is recommended to peel off the protection film on the polarizer slowly so that the electrostatic charge can be minimized.

14. Quality and reliability

14-1 Test condition

Test should be conducted under the following conditions :

Ambient temperature : 25 ± 5ºC

Humidity : 55 ± 10% RH

14-2 Sampling plan

Sampling method shall be in accordance with MIL-STD-105D, inspection level II, normal inspection, and single sampling plan tables for normal tightened and reduced inspection.

14-3 Acceptable quality level

A major defect is a defect that could result in failure or materially reduce that the usability of the unit of product for its intended purpose.

A minor defect is one that does not materially reduce the usability of the unit of product for its intended purpose or is a departure from established standards having no significant bearing on the effective use or operation of the unit.

14-4 Appearance

Appearance test is to be conducted by human eyes at approximately 30cm distance from LCD module under the single fluorescent light without reflection.

Condition : a. Illumination: 500 Lux min
b. Inspect determination: 30cm
c. Inspect direction: above the LCM
d. View angle: ±30º

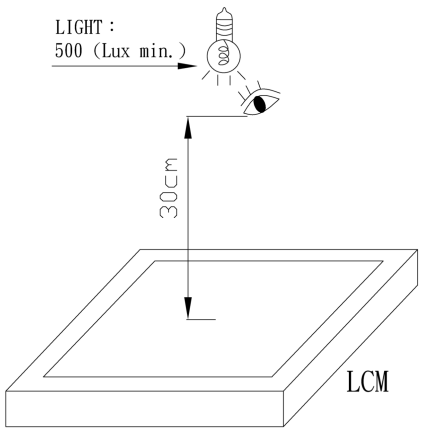

The inspection area of LCD panel shall be within the range of following limits.

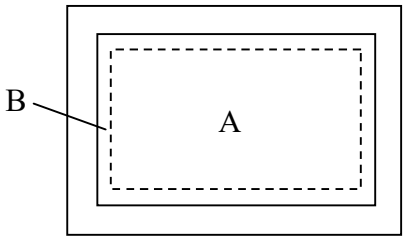

Zone A：Display Active Area
Zone B：Viewing Area

14-5 Inspection quality criteria for TFT LCM

ITEM	*DESCRIPTION OF DEFECTS*	*Zone*	*Acceptable level (%)*
DIMENSION	Refer to individual acceptance specification	A , B	2.5
LINE DEFECT ON SURFACE (SCRATCHES , BLACK / WHITE LINE)	(a) W ≦0.05mm , disregard (b) L ≦15mm & 0.05mm < W ≦0.1mm , N ≦1 (c) W > 0.1mm , REJ 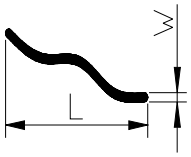	A , B	2.5
SPOT DEFECT ON SURFACE (BLACK / WHITE SPOT)	Average diameter, D (a) D ≦0.15mm , N ≦3.ACC (b) 0.15mm < D ≦0.3mm , N ≦2.ACC (c) D > 0.3mm , REJ (d) Distance between 2 spots ≧5mm 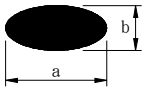 $D=\frac{a+b}{2}$	A , B	2.5
PROTRUDE DOT / DENT ON SURFACE	Average diameter D (a) D ≦0.15mm , N ≦3.ACC (b) 0.15mm < D ≦0.3mm , N ≦2.ACC (c) D > 0.3mm , REJ 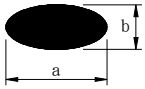 $D=\frac{a+b}{2}$	A , B	2.5
BRIGHT / DARK POINT	<table><tr><th colspan="2">Item</th><th>Allow number in Area A</th></tr><tr><td rowspan="4">(a) Bright point</td><td>Single point</td><td>0</td></tr><tr><td>Two adjacent point</td><td>0</td></tr><tr><td>Three adjacent point</td><td>0</td></tr><tr><td>Total point</td><td>0</td></tr><tr><td rowspan="4">(b) Dark point</td><td>Single point</td><td>0</td></tr><tr><td>Two adjacent point</td><td>0</td></tr><tr><td>Three adjacent point</td><td>0</td></tr><tr><td>Total point</td><td>0</td></tr></table>	A	2.5
CHROMA MURA	Mura and leak are defined through transmission ND 5% filter	A	2.5
DISPLAY ABNORMAL	(a) Non display (b) Line defect (c) Response time, contrast ratio, brightness or viewing angle abnormal (d) Water ripple (e) Flicker	A	0.65

NOTE：(1) ACC：Accept (2) REJ：Reject