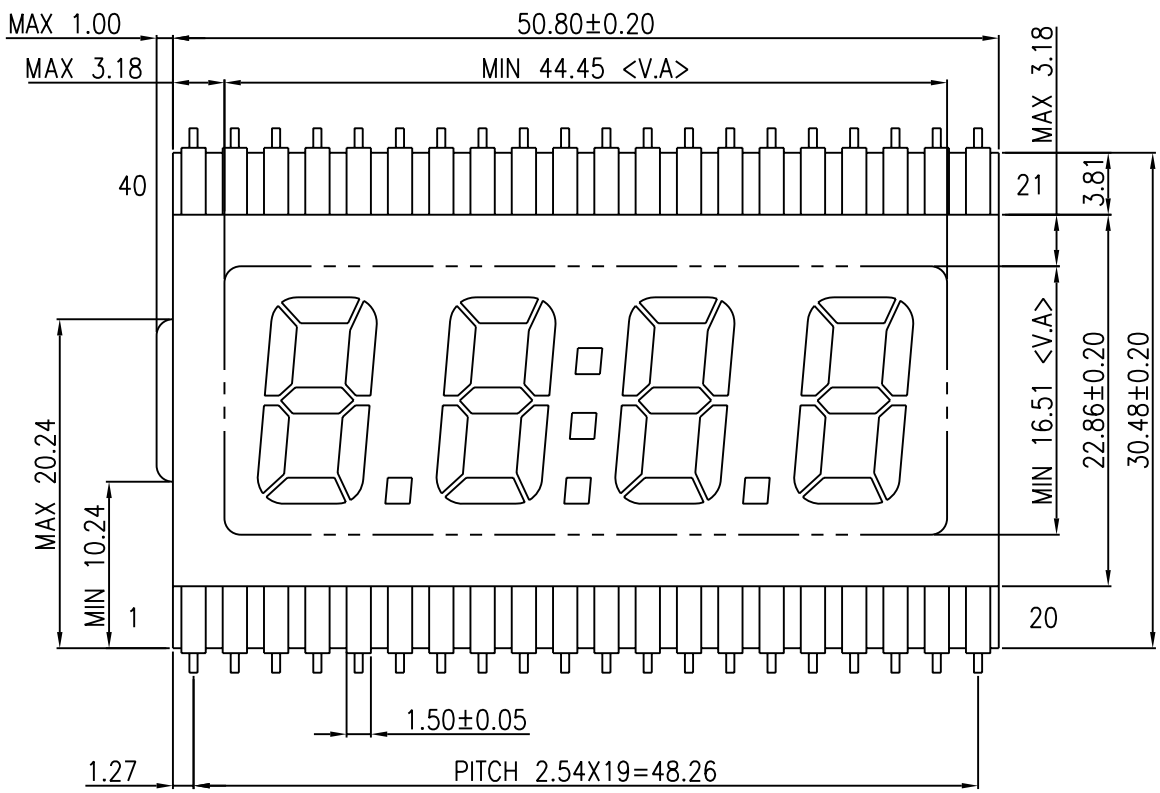

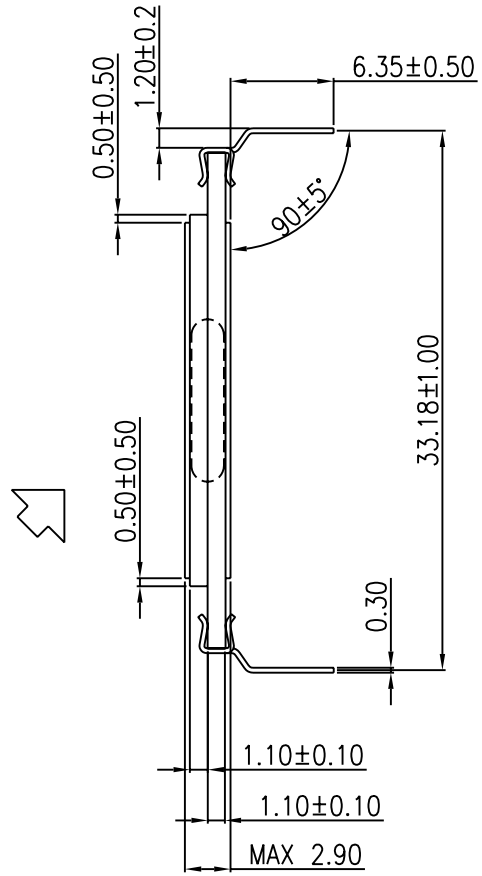

DIRECTION
6:00

VIEWING

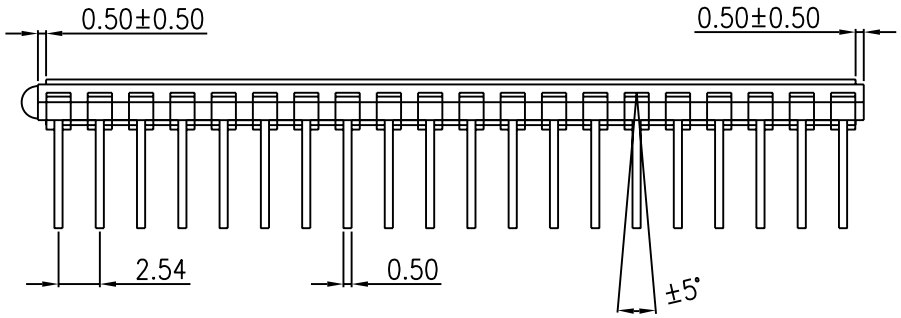

DWN	Bauing	UNIT	mm	CUST. MODEL	
CKD		SCALE		MODEL	ASI-1262
APPD				DATE	DEC-18-2018

1	INITIAL REVISION	DEC-18-2018
REV.	MODIFY CONTENT	DATE

ALL SHORE INDUSTRIES.INC

NAME	1262
PAGE	1/2

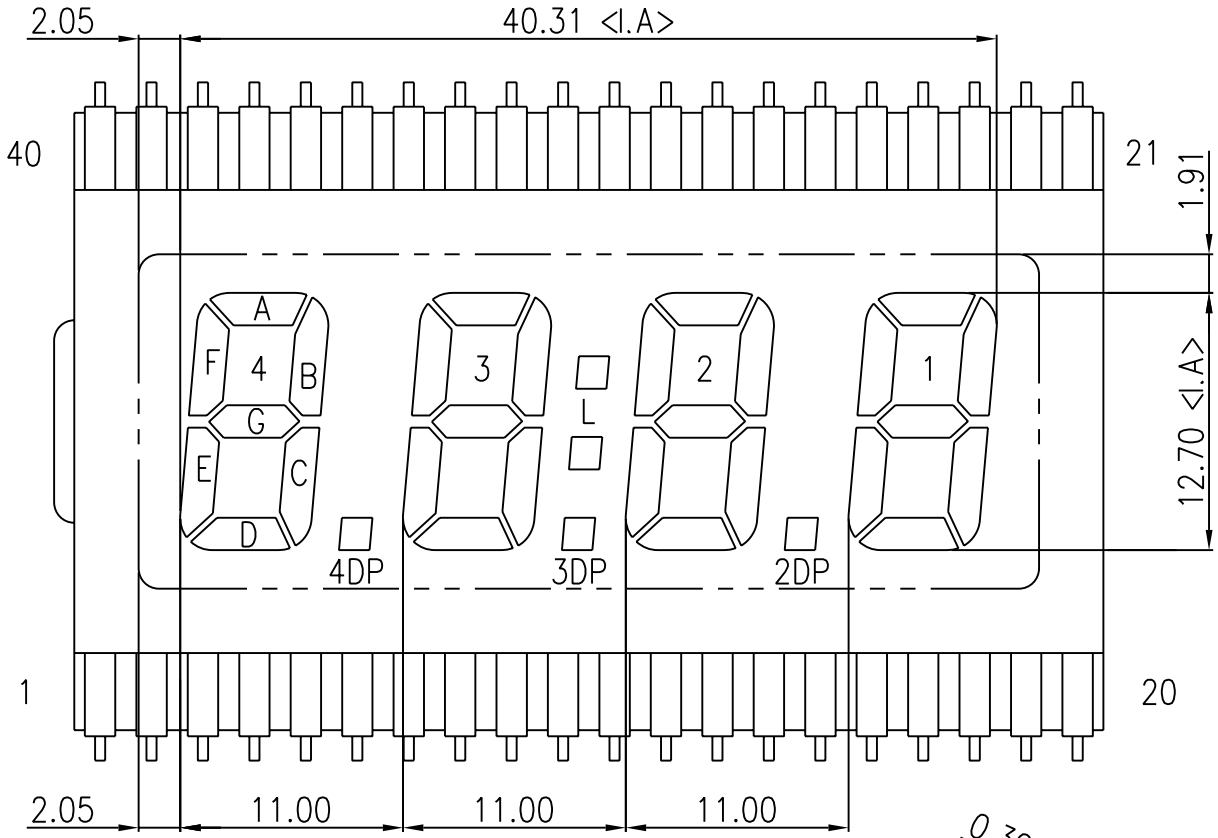

	COM		COM
1	COM	21	1A
2	·	22	1F
3	·	23	1G
4	·	24	2B
5	4E	25	2A
6	4D	26	2F
7	4C	27	2G
8	4DP	28	L
9	3E	29	3B
10	3D	30	3A
11	3C	31	3F
12	3DP	32	3G
13	2E	33	·
14	2D	34	4B
15	2C	35	4A
16	2DP	36	4F
17	1E	37	4G
18	1D	38	·
19	1C	39	·
20	1B	40	COM

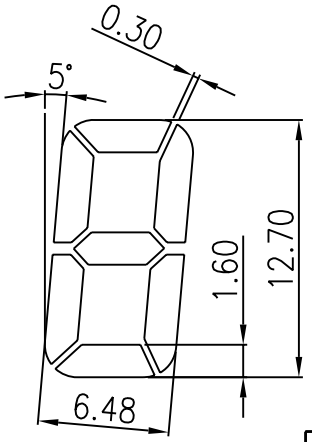

NOTE:

1. TN TYPE
2. DRIVING METHOD: STATIC
3. OPERATING VOLTAGE: 3.0 V
4. OPERATING TEMP: −0 ~ 50°C
5. STORAGE TEMP: −10 ~ 60°C
6. VIEWING DIRECTION: 6:00
7. POLARIZER MODE: REFLECTIVE POSITIVE
8. CONNECTION: PIN TYPE
9. DIMENSIONS ARE IN MILLIMETERS AND UNLESS OTHERWISE NOTED ARE ±0.20MM

DWN	Bauing	UNIT	mm	CUST. MODEL	
CKD		SCALE		MODEL	ASI-1262
APPD				DATE	DEC-18-2018
ALL SHORE INDUSTRIES.INC				NAME	1262
				PAGE	2/2